H4–H4

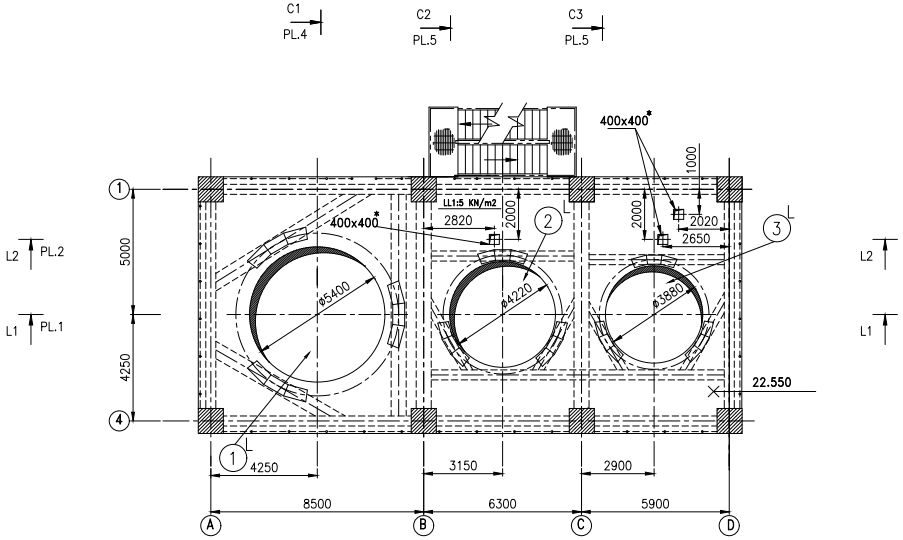

H5–H5

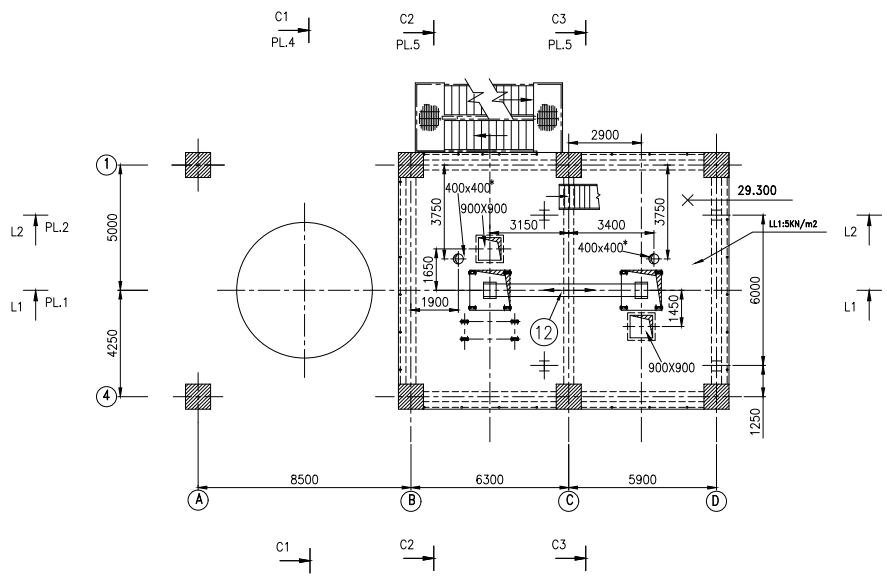

H6–H6

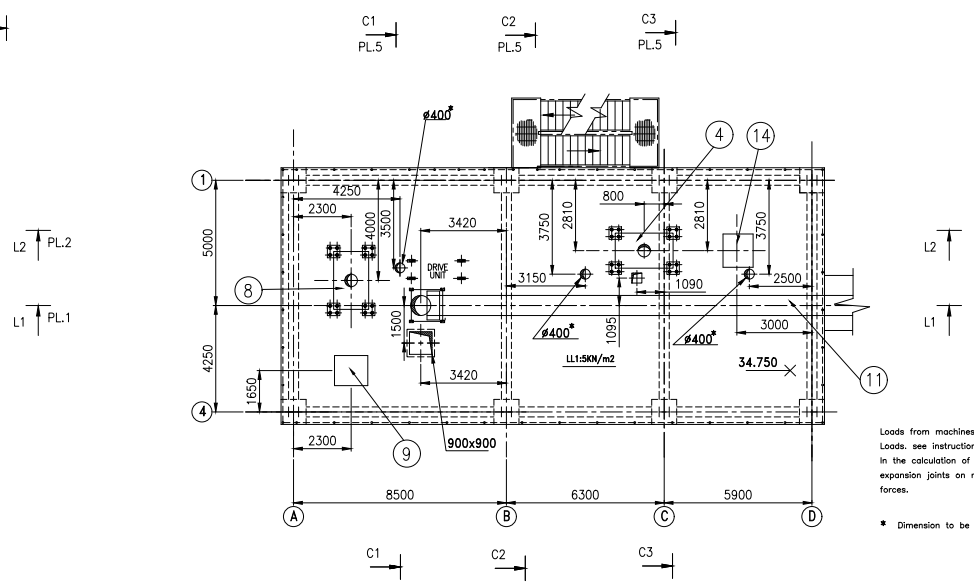

Loads from machines and ducts do not include natural Loads. see instructions No. 749500.
In the calculation of natural loads it is assumed that expansion joints on machines and ducts cannot transfer forces.

* Dimension to be revised after the equipment is designed